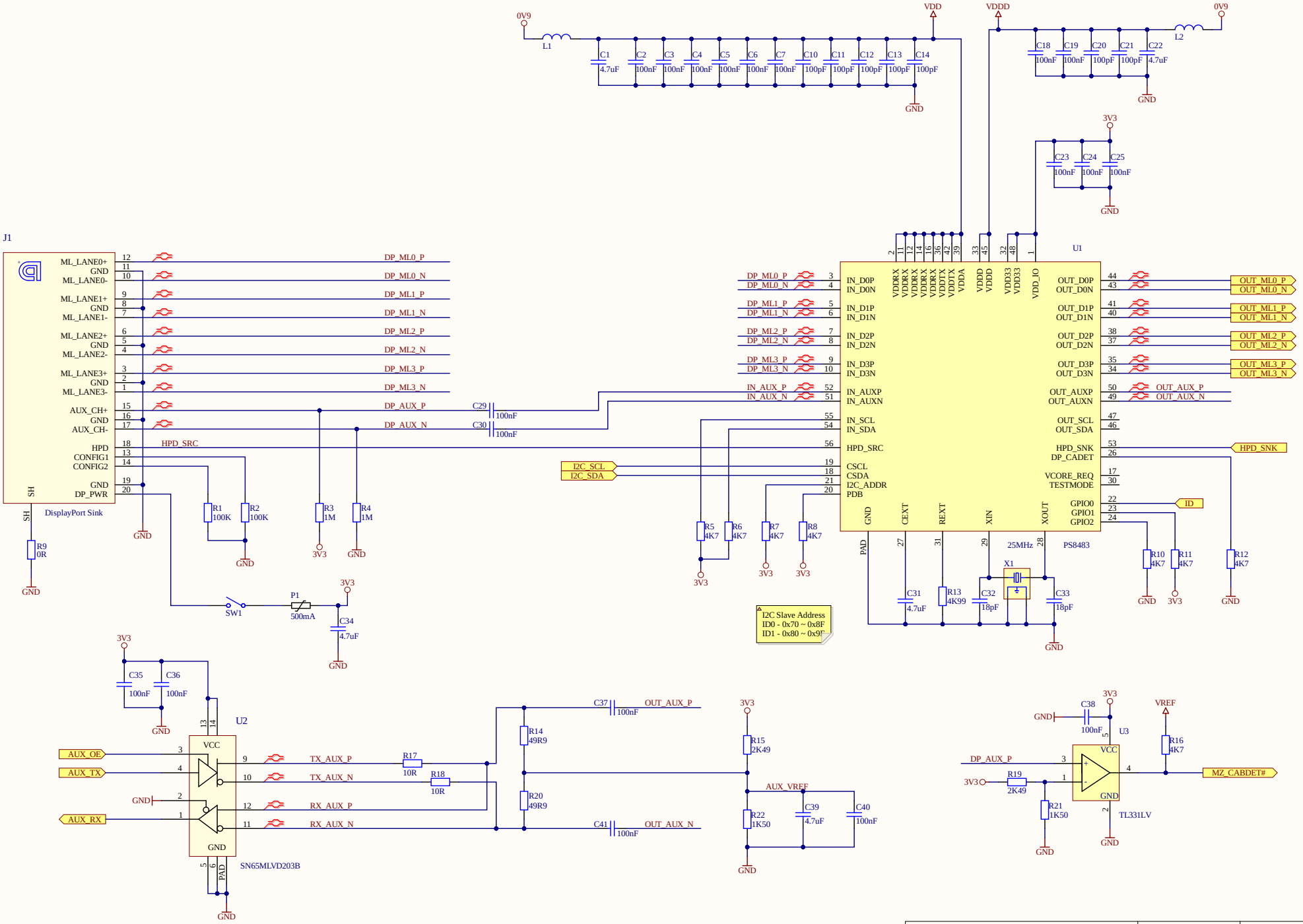

Title Tentiva DP2.1 RX - DP		Parretto B.V. www.parretto.com
Size: A3	Number: *	Revision: B
Date: 17/08/2024	Time: 16:43:58	Sheet 1 of 2

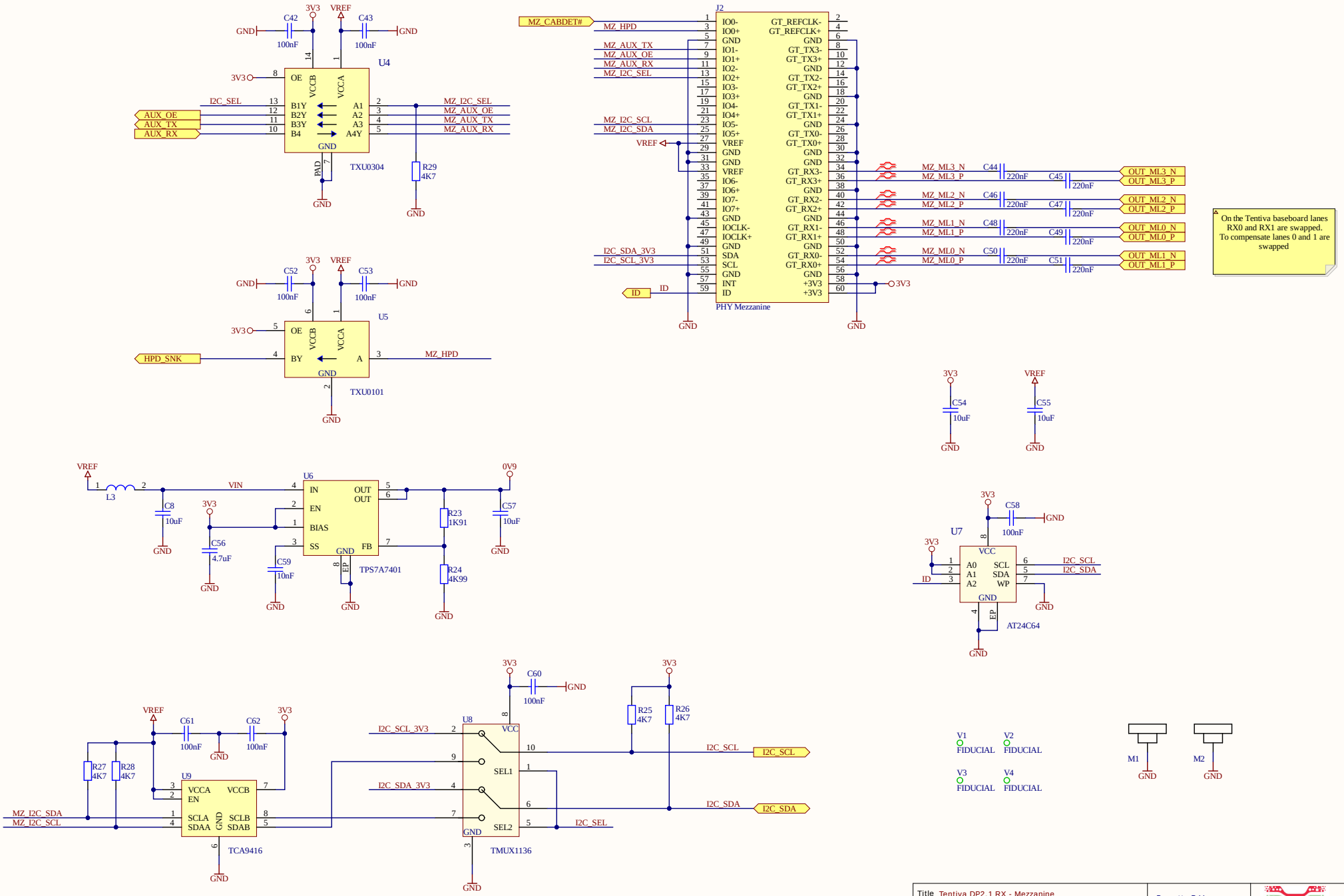
U4
TXU0304
U5
TXU0101
J2
PHY Mezzanine
U6
TPS7A7401
U7
AT24C64
U8
TMUX1136
U9
TCA9416
On the Tentiva baseboard lanes RX0 and RX1 are swapped. To compensate lanes 0 and 1 are swapped
Title Tentiva DP2.1 RX - Mezzanine
Size: A3
Number: *
Revision: B
Date: 17/08/2024
Time: 16:43:58
Sheet 2 of 2
Parretto B.V.
www.parretto.com