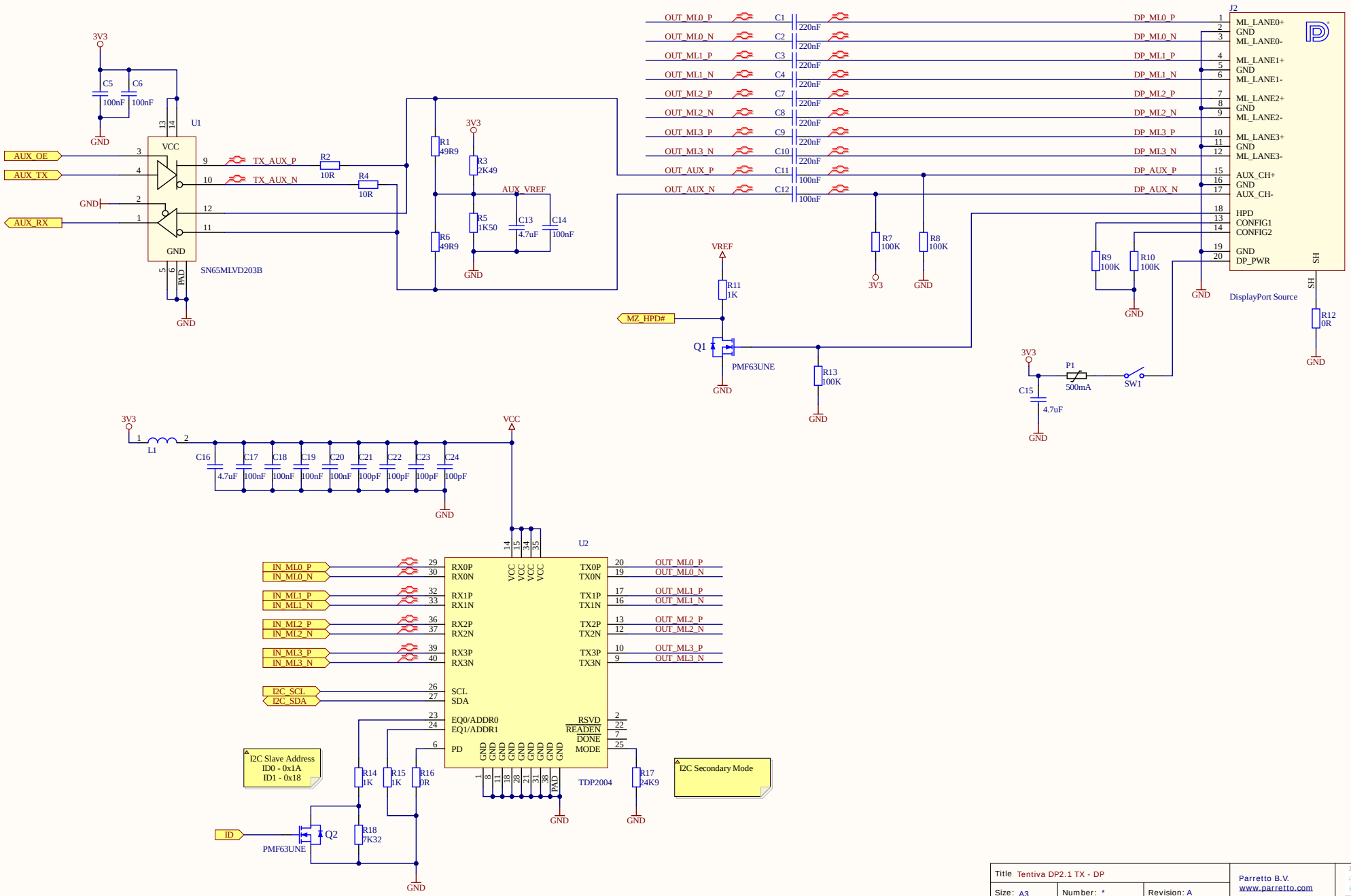

Title Tentiva DP2.1 TX - DP			Parretto B.V. www.parretto.com
Size: A3	Number: *	Revision: A	
Date: 07/04/2024	Time: 22:08:42	Sheet 1 of 2	

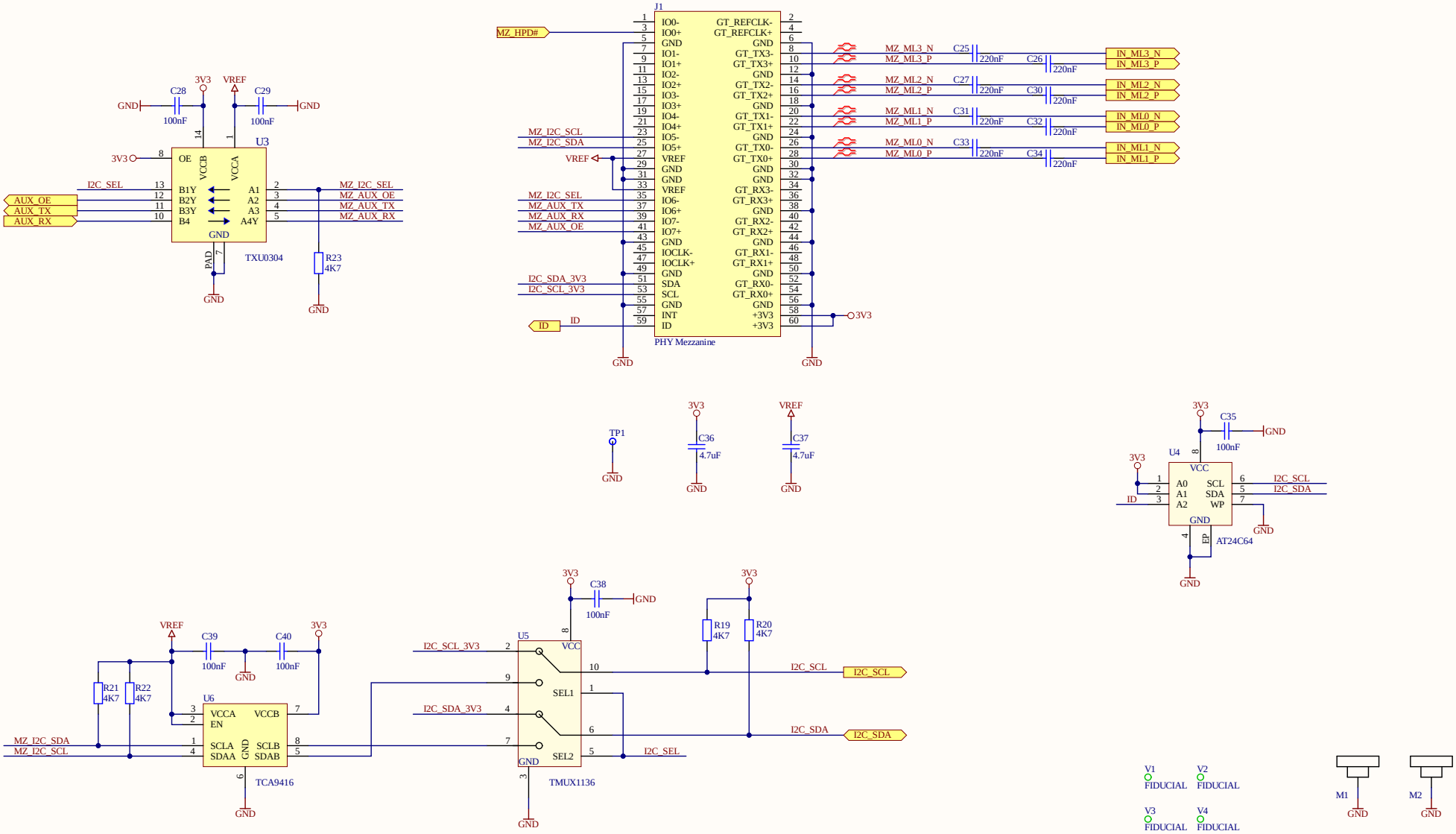

Title Tentiva DP2.1 TX - Mezzanine			Parretto B.V. www.parretto.com
Size: A3	Number: *	Revision: A	
Date: 07/04/2024	Time: 22:08:42	Sheet 2 of 2	